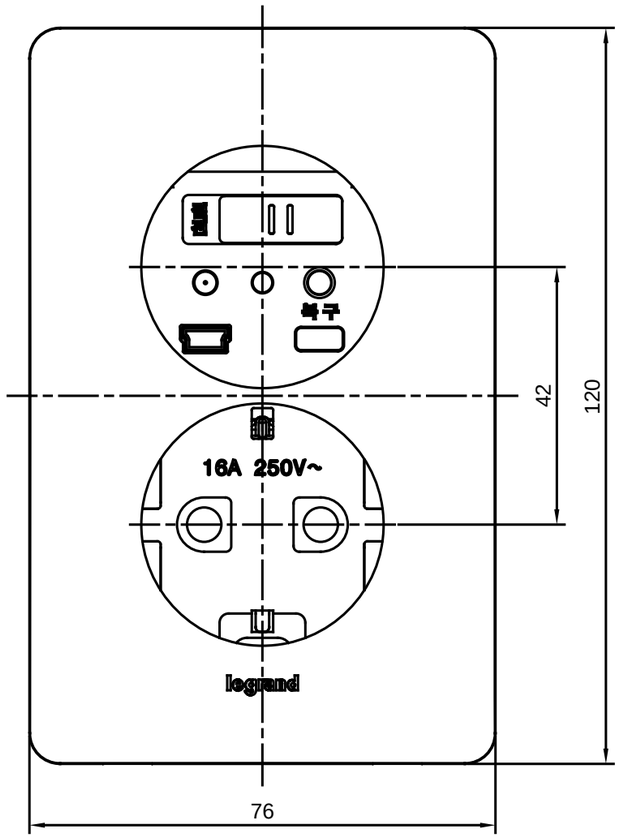

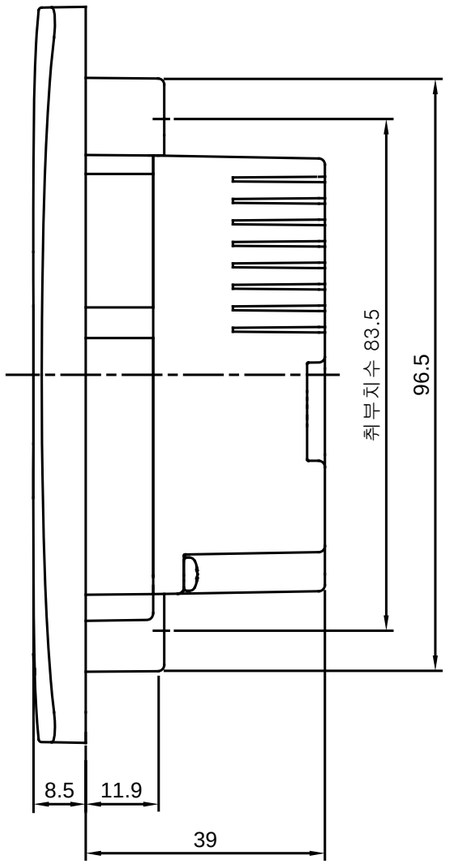

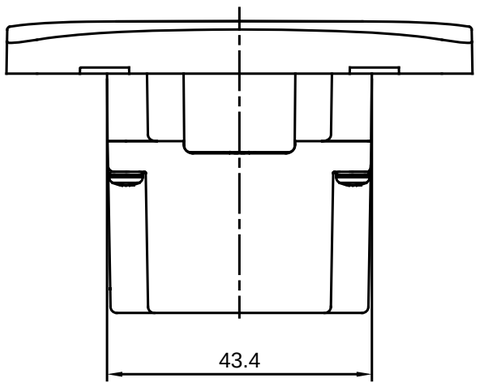

MATIERE / RAW-MATERIAL:	DATE: SITE: LUBE	DESSINE / DRAWN:	VERIFIE / CHECKED:	APPROUVE / APPROVED:
			◦	◦

TOLERANCE:

ECHELLE / SCALE:

DESIGNATION:

대기전력 자동차단 콘센트, 16A 250VAC

legrand

N° Plan / Drawing N°	Variant	REV.
	1	1

Propriete LEGRAND FRANCE - Communication a des tiers interdite sans son autorisation.
Property LEGRAND FRANCE - Communication with thirds forbidden without its authorisation.

FEUILLE SHEET 1/1

WDF005/B